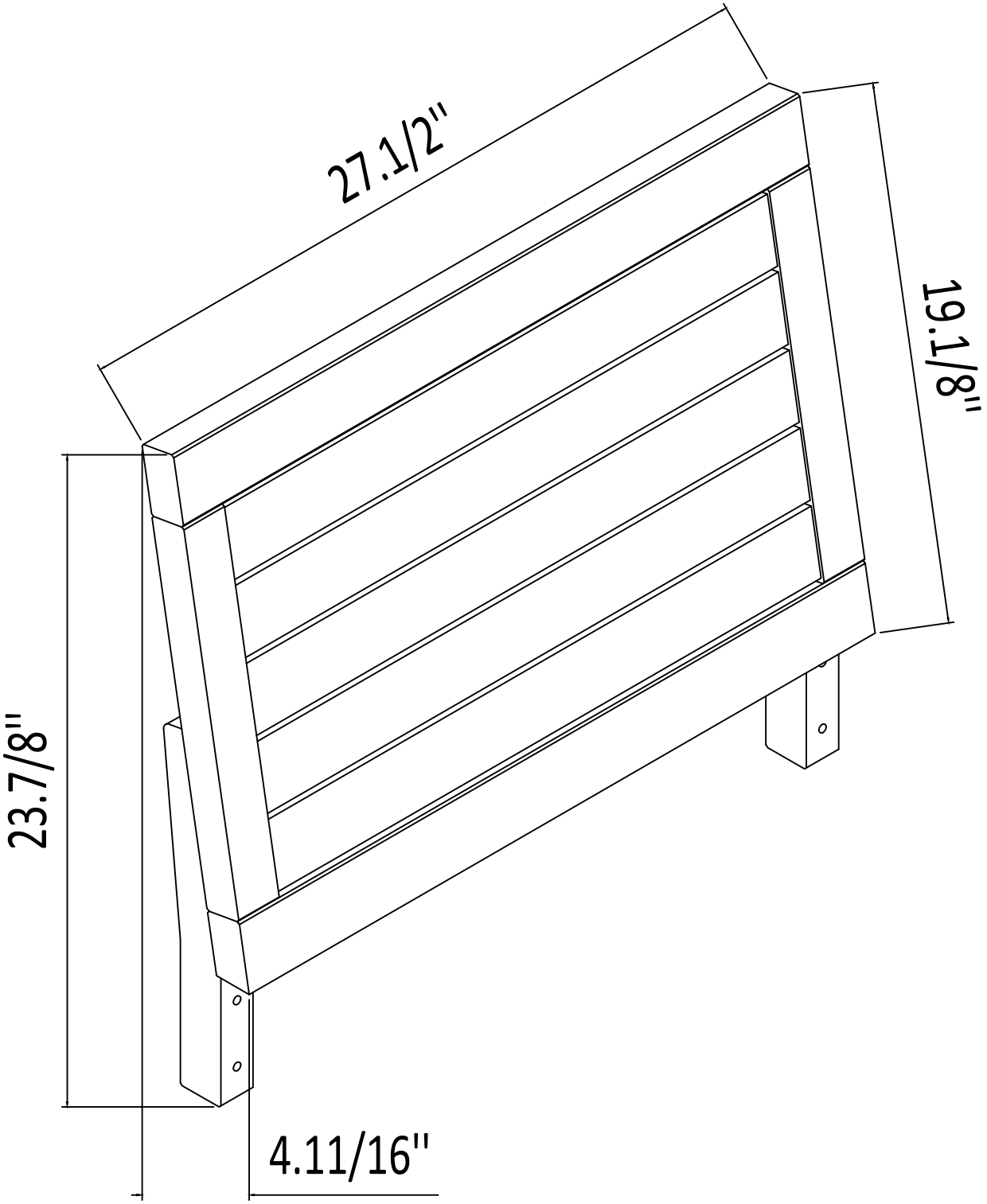
27.1/2"
19.1/8"
23.7/8"
4.11/16"